XP95 Optical Smoke Detector ▲ **Part Number 55000-600/620/660**

OPERATING PRINCIPLES

The XP95 optical detector uses the same outer case as the ionisation smoke detector and is distinguished by the indicator LED which is clear in standby and red in alarm. Within the case is a printed circuit board which on one side has the light proof labyrinth chamber with integral gauze surrounding the optical measuring system and on the other the address capture, signal processing and communications electronics.

An infrared light emitting diode within its collimator is arranged at an obtuse angle to the photo-diode. The photo-diode has an integral daylight-blocking filter.

The IR LED emits a burst of collimated light every second. In clear air the photo-diode receives no light directly from the IR LED because of the angular arrangement and the dual mask. When smoke enters the chamber it scatters photons from the emitter IR LED onto the photo-diode in an amount related to the smoke characteristics and density. The photo-diode signal is processed by the optical ASIC and passed to the A/D converter on the communications ASIC ready for transmission when the device is interrogated.

ELECTRICAL DESCRIPTION

The detector is designed to be connected to a two wire loop circuit carrying both data and a 17V to 28V dc supply. The detector is connected to the incoming and outgoing supply via terminals L1 and L2 in the mounting base. A remote LED indicator requiring not more than 4mA at 5V may be connected between the +R and -R terminals. An earth connection terminal is also provided.

When the device is energised the ASICs regulate the flow of power and control the data processing. The optical ASIC is controlled by the communications ASIC and pulses the IR LED. The signal from the photo-diode is processed by the optical ASIC and transferred to the communications ASIC where it is then stored. When smoke enters the chamber the photo-diode signal increases. The information to the A/D converter is updated once per second or when either the monitor or the preceding address is interrogated. Whenever the device is interrogated this data is sent to the control equipment. EN54 threshold alarm levels are calibrated within the processing ASIC. If the device is not addressed within one second of its last polling and the analogue value is greater than the EN54 alarm level the alarm flag is initiated and the device address is added to the data stream every 32 polling cycles from its last polling for the duration of the alarm level condition, except when the alarming device is being interrogated. This can provide a location identified alarm from any device on the loop in approximately two seconds.

The detector is calibrated to give an analogue value of 25±7 counts in clean air. This value increases with smoke density. A count of 55 corresponds to the EN54 alarm sensitivity level. See Fig. 9.

ENVIRONMENTAL CHARACTERISTICS

The XP95 optical smoke detector is unaffected by wind or atmospheric pressure and operates over the temperature range -20°C to +60°C. See Fig. 10.

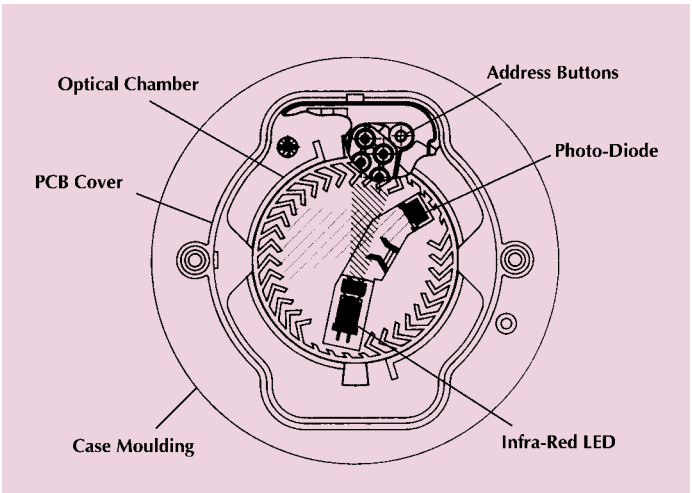

Fig.7 Top section - XP95 Optical Smoke Detector

TECHNICAL DATA

XP95 Optical Smoke Detector
Detector Part No 55000-600/620/660
Base Part No 45681-210

Specifications are typical and given at 23°C and 50% relative humidity unless otherwise stated.

Detector Type:
Point type smoke detector for fire detection and fire alarm systems for buildings

Detection Principles:
Photo-electric detection of light scattered in a forward direction by smoke particles

Chamber Configuration:
Horizontal optical bench housing an infrared emitter and sensor arranged radially to detect scattered light

Sensor:
Silicon PIN photo-diode

Emitter:
GaAs Infra-red light emitting diode

Sampling Frequency:
1 second

Sensitivity:
Nominal response threshold value of 0.12 dB/m when measured in accordance with EN54-7:2000

Supply Wiring:
Two wire supply, polarity insensitive

Terminal Functions:

L1&L2	supply in and out connections (polarity insensitive)
+R	remote indicator positive connection (internal 2.2kΩ resistance to supply +ve)
-R	remote indicator negative connection (internal 2.2kΩ resistance to supply - ve)

Supply Voltage:
17 to 28 Volts dc

Quiescent Current:
340µA average, 600µA peak

Power-up Surge Current:
1mA

Duration of Power-up Surge Current:
0.3 seconds

Maximum Power-up Time:
4 seconds for communications (measured from application of power and protocol)
10 seconds to exceed 10 counts
35 seconds for stable clean air value

Alarm Level Analogue Value:
55

Clean Air Analogue Value:
25±7 counts

Alarm Indicator:
Clear light emitting diode (LED) emitting red light

Alarm LED Current:
4mA

Remote LED Current:
4mA at 5V (measured across remote load)

Storage Temperature:
-30°C to +80°C

Operating Temperature:
-20°C to +60°C

Humidity:
(No condensation or icing)
0% to 95% relative humidity

Wind Speed:
Unaffected by wind

Atmospheric Pressure:
Unaffected

Electro-magnetic Compatibility:
See page 21 for full details

IP Rating:
23D

Approvals & Regulatory Compliance:
See page 21 for full details

Vibration, Impact & Shock:
To EN54-7:2000

Dimensions: (diameter x height)
Detector: 100mm x 42mm
Detector in Base:
100mm x 50mm

Weights:
Detector: 105g
Detector in Base: 157g

Materials:
Detector Housing: White polycarbonate V-0 rated to UL 94
Terminals: Nickel plated stainless steel

CE
0832

technical data

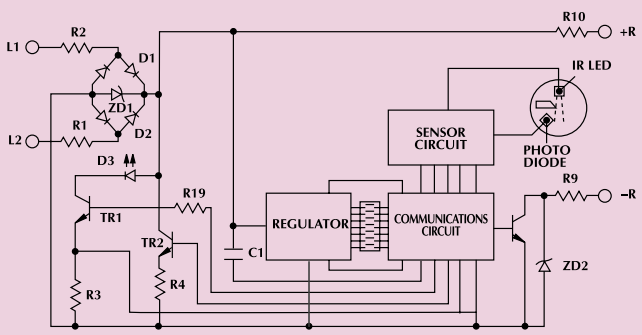

Fig.8 Schematic diagram - XP95 Optical Smoke Detector

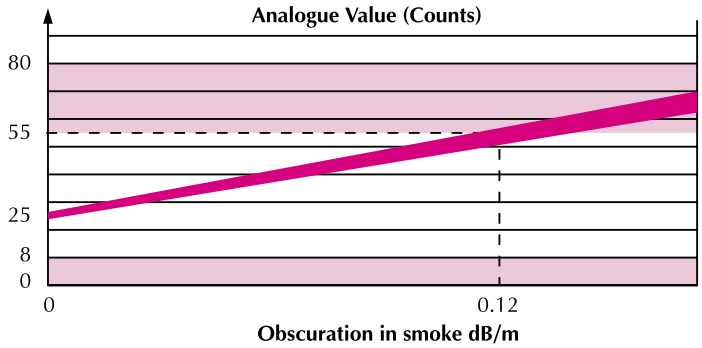

Fig.9 Typical Response Characteristic - XP95 Optical Smoke Detector

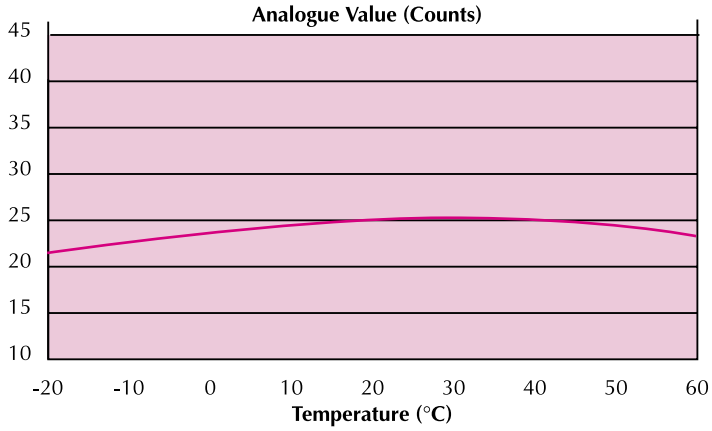

Fig.10 Typical Temperature Response - XP95 Optical Smoke Detector

apollo
WORLD CLASS FIRE SOLUTIONS